RE 50171
Edition: 2020-08
Replaces: 2016-03

rexroth
A Bosch Company

Bladder-type accumulator

Type HAB

HAB10-330_d

- Component series 6X
- Nominal volume 1 ... 50 liters
- Maximum operating pressure 350 bar

Features

- Hydro-pneumatic accumulators for use in stationary machinery and systems
- Use:
  - Energy storage in intermittent operation systems
  - Energy reserve for emergencies
  - Compensation of leakage losses
  - Impact and vibration absorption
  - Volume compensation in case of pressure and temperature change
- Approval:
  - according to PED 2014/68/EU
  - according to NR13
  - according to TR CU 032/2013

Contents

Ordering code

01	02		03		04		05	06	07		08	09	10	11	12		13	14
HAB		**–**		**–**	**6X**	**/**				**–**			**1**	**1**	**1**	**–**		

Device designation

01	Bladder-type accumulator		**HAB**

Nominal volume

02		**1**	**2.5**	**4**	**6**	**10**	**20**	**24**	**32**	**50**	

Maximum operating pressure

03	350 bar	●	●	●	●						**350**
	330 bar	o	o	o	o	●	●	●	●	●	**330**
	50 bar			o							**50**
	30 bar				o						**30**
	20 bar					o					**20**
	10 bar						o				**10**

Component series

04	60 ... 69 (unchanged installation and connection dimensions)		**6X**

Preload pressure

05	0 bar	●	●	●	●	●	●	●	●	●	**0**
	> 0 bar	o	o	o	o	o	o	o	o	o	

Port size for hydraulic fluid [1)]

06	G3/4" pipe thread	●									**G05**
	G1 1/4" pipe thread		●	●	●						**G07**
	G2" pipe thread					●	●	●	●	●	**G09**
	2" SAE flange (high-pressure series)					o	o	o	o	o	**S19**

Type of mounting for hydraulic fluid [1)]

07	Pipe thread with radial sealing surface	●	●	●	●	●	●	●	●	●	**G**
	Flange mounting with axial sealing surface					o	o	o	o	o	**F**

Gas port form [1)]

08	Gas valve ISO 4570 8V1	●	●	●	●	●	●	●	●	●	**2**
	Gas valve 5/8“-18 UNF	o	o	o	o	o	o	o	o	o	**3**

Diaphragm material

09	NBR	●	●	●	●	●	●	●	●	●	**N**
	ECO			o		o			o		**E**
	FKM				o	o	o		o	o	**F**
	HNBR	o	o	o	o	o	o	o	o	o	**H**

Tank material

10	Steel		**1**

Surface of the tank inside

11	Steel		**1**

Surface of the connection side

12	Steel		**1**

[1)] Other ports upon request

●	Preferred program
o	Delivery range
	Upon request

Ordering code

01	02		03		04		05	06	07		08	09	10	11	12		13	14
HAB		**–**		**–**	**6X**	**/**				**–**			**1**	**1**	**1**	**–**		

Nominal volume

02		**1**	**2.5**	**4**	**6**	**10**	**20**	**24**	**32**	**50**	

Approval [2)]

13	Operating instructions	EU	●									**BA**
	PED 2014/68/EU	EU		●	●	●	●	●	●	●	●	**CE**
	National Requirement 13	EU + Brazil			o	o	o	o	o	o	o	**CE+NR13**
	TR CU 032/2013	EU + Eurasian customs union		o	o	o	o	o	o	o	o	**CE+EAC**

Additional details

14	Further details in the plain text, e.g. special versions	*

[2)] Further approvals upon request

●	Preferred program
o	Delivery range
	Upon request

Preferred types HAB-6X

Type	Material no.
HAB1-350-6X/0G05G-2N111-BA	R901435300
HAB2.5-350-6X/0G07G-2N111-CE	R901435301
HAB4-350-6X/0G07G-2N111-CE	R901435302
HAB6-350-6X/0G07G-2N111-CE	R901435303
HAB10-330-6X/0G09G-2N111-CE	R901435304
HAB20-330-6X/0G09G-2N111-CE	R901435305
HAB24-330-6X/0G09G-2N111-CE	R901435306
HAB32-330-6X/0G09G-2N111-CE	R901435307
HAB50-330-6X/0G09G-2N111-CE	R901435308

Function, section

General information

Hydro-pneumatic accumulators are hydrostatic devices capable of storing a certain amount of energy in order to release it to the hydraulic system when needed.
Fluids only possess low compressibility; however, gases are highly compressible. The working principle of all gas-loaded hydro-pneumatic accumulators is based on this difference.
The difference between bladder and diaphragm type accumulators lies in the type of separator element.
Hydro-pneumatic accumulators essentially consist of a fluid section and a gas section with a gas-tight separator element. The fluid section has a connection to the hydraulic circuit.
If a higher liquid pressure is applied to a specific quantity of pressurized gas, the gas volume decreases as the liquid pressure increases, with the gas pressure increasing with the liquid pressure.
If the pressure of the fluid decreases, the fluid is pushed back into the hydraulic system by the expanding gas until the pressure is balanced again.

Bladder-type accumulator

Bladder-type accumulators consist of a seamless cylindrical pressure container (1) made of high-strength steel.
An elastic bladder (2) mounted inside the container separates the accumulator into a gas side and a fluid side.
Via the gas valve (4), the bladder is filled with nitrogen up to the intended gas filling pressure $\mathbf{p}_0$.
The oil valve (3) located inside the oil port of the bladder-type accumulator closes if the pressure on the gas side is higher compared to the fluid side. This prevents the bladder from entering the oil channel and being destroyed.
When the minimum operating pressure is reached, a small fluid volume (approx. 10% of the nominal volume of the hydro-pneumatic accumulator) should remain between the bladder and the oil valve in order to prevent the bladder from hitting the valve during each expansion process.
The gas valve (4) consists of sealing cap (4.1), gas valve insert (4.2), gas prefill valve body (4.3), and O-ring (4.4). These parts can be replaced individually.
The type cap (7) includes the technical data and features of the hydro-pneumatic accumulator.

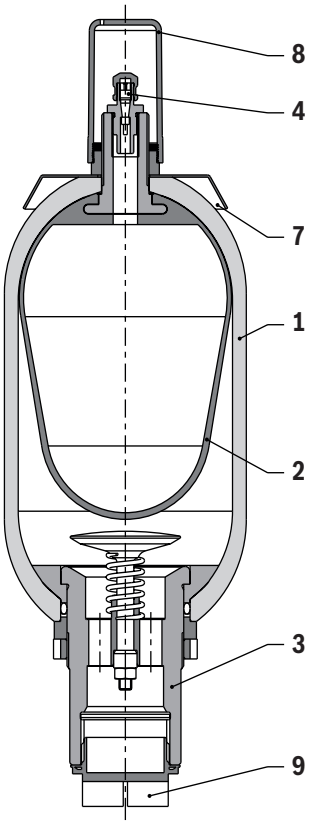

Detail X

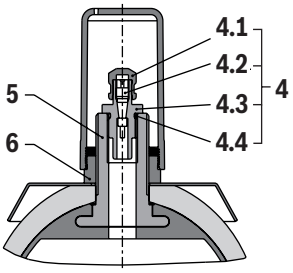

Symbol

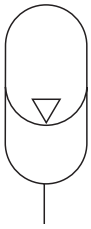

1 Tank
2 Bladder
3 Oil valve
4 Gas valve
5 Gas valve support
6 Nut
7 Type cap
8 Cover cap
9 Protective cap of oil valve

Technical data
(For applications outside these values, please consult us!)

General											
Nominal volume	V_{nom}	l	1	2.5	4	6	10	20	24	32	50
Weight		kg	7	10	16.5	20	32	53	61	85	123
Design			Bladder-type accumulator								
Installation position			Bottom fluid connection socket, others upon request								
Type of mounting			With clamping collars and console								
Line connection			Screw-in thread								
Surface			Primed, blue color (RAL 5010)								

Hydraulic											
Nominal volume	V_{nom}	l	1	2.5	4	6	10	20	24	32	50
Effective gas volume	V_{eff}	l	1.0	2.4	3.7	5.9	9.2	18.1	24.5	33.4	48.7
Maximum flow	q_{max}	l/min	240	450	450	450	900	900	900	900	900
Maximum operating pressure	p_{max}	bar	330	330	330	330	330	330	330	330	330
			350	350	350	350	–	–	–	–	–
Maximum pressure fluctuation range	$\Delta p_{dyn} = p_2 - p_1$	bar	200	200	200	200	125	125	125	125	125
Operating pressures and useful volume			See calculations on page 6 ... 9								

Pneumatic			
Charging gas			Nitrogen, at least cleanliness class 4.0, N_2 = 99.99 vol.%
Gas filling pressure (at 20 °C room temperature)	p_0	bar	$p_0 \leqq 0.8$ of p_{max}

Hydraulic fluid		Classification	Material	Standards	Data sheet
Mineral oils		HLP, HLPD, HVLP, HVLPD	NBR, ECO, HNBR	DIN 51524	90220
Special fluids	▶ environmentally compatible	HETG	FKM	ISO 15380	90221
		HEES			
		HEPG			
	▶ water-free, flame-resistant	HFDU	FKM	ISO 12922	90222
		HFDR			
	▶ containing water, flame-resistant	HFC	NBR	ISO 12922	90223

Further information on the hydraulic fluids:		
Temperature range (others on request)	°C	NBR: −15 ... +80 [1] FKM: −20 ... +80 [2] HNBR: −30 ... +80 [3] ECO: −32 ... +80 [4]
Maximum admissible degree of contamination of the hydraulic fluid, cleanliness class according to ISO 4406 (c)		Class 20/18/15

[1] Acrylonitrile butadiene rubber
[2] Flour rubber
[3] Hydrated acrylonitrile butadiene rubber
[4] Epichlorohydrin rubber

Application, mode of operation

Applications

Various applications exist for hydro-pneumatic accumulators:

- Energy storage in order to save pump drive power in intermittent operation systems.
- Energy reserve for emergencies, e.g. upon failure of the hydraulic pump.
- Compensation of leakage losses.
- Impact and vibration absorption in case of periodic vibrations.
- Volume compensation in case of pressure and temperature changes.

Mode of operation

Fluids are almost incompressible and therefore cannot store pressure energy. Hydro-pneumatic accumulators use the compressibility of a gas for fluid storage. Exclusively use nitrogen with a minimum cleanliness class of 4.0!
N_2 = 99.99 vol.%

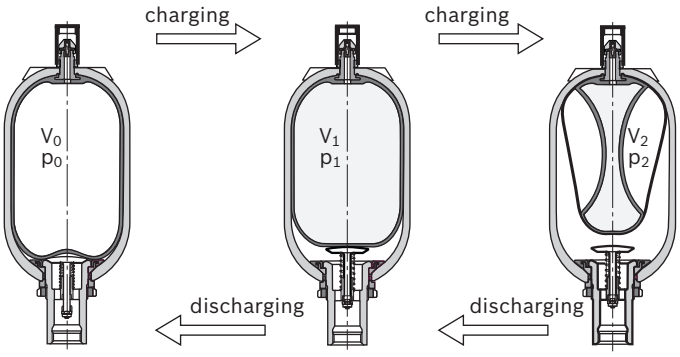

Calculation

Pressures

For calculation of an accumulator, the following pressures play a respective role:

$\mathbf{p}_0$	Gas filling pressure at room temperature and drained fluid chamber
$\mathbf{p}_0$ (**t**)	Gas filling pressure at operating temperature
$\mathbf{p}_0$ ($\mathbf{t}_{max}$)	Gas filling pressure at maximum operating temperature
$\mathbf{p}_1$	Minimum operating over pressure
$\mathbf{p}_2$	Maximum operating over pressure

In order to achieve the best utilization of the accumulator volume possible as well as a long life cycle, compliance with the following values is recommended:
$\mathbf{p}_0$ ($\mathbf{t}_{max}$) ~ 0.9 × $\mathbf{p}_1$ (1)

The highest hydraulic pressure should not exceed four times the filling pressure, as otherwise too much stress will be put on the elasticity of the bladder, resulting in too great a compression change with strong gas heating:
$\mathbf{p}_2 \leqq 4 \times \mathbf{p}_0$ (2)

The life cycle of the accumulator bladder is the higher the smaller the difference between $\mathbf{p}_1$ and $\mathbf{p}_2$ is. However, the operating ratio of the maximum accumulator capacity will also be reduced accordingly.

Calculation

Oil volume

According to the pressures $\mathbf{p}_0$ ... $\mathbf{p}_2$, the gas volumes $\mathbf{V}_0$ ... $\mathbf{V}_2$ will result.
In this process, $\mathbf{V}_0$ simultaneously is the nominal volume of the accumulator.
The available oil volume $\Delta\mathbf{V}$ corresponds to the difference of the gas volumes $\mathbf{V}_1$ and $\mathbf{V}_2$:
$\Delta\mathbf{V} \leqq \mathbf{V}_1 - \mathbf{V}_2$ (3)

The gas volume variable within a pressure differential is determined by the following equations:

- For an isothermal state change of gases, i.e. when the change of the gas cushion happens so slowly as to leave sufficient time for a complete heat exchange between the nitrogen and its environment, therefore keeping the temperature constant, the following applies:
  $\mathbf{p}_0 \times \mathbf{V}_0 = \mathbf{p}_1 \times \mathbf{V}_1 = \mathbf{p}_2 \times \mathbf{V}_2$ (4.1)

- For an adiabatic state change, i.e. a quick change of the gas cushion accompanied by a temperature change of the nitrogen, the following applies:
  $\mathbf{p}_0 \times \mathbf{V}_0^{\chi} = \mathbf{p}_1 \times \mathbf{V}_1^{\chi} = \mathbf{p}_2 \times \mathbf{V}_2^{\chi}$ (4.2)

χ = ratio of the specific gas heats (adiabatic exponent), for nitrogen = 1.4

In practice, state changes rather follow adiabatic laws. Often charging is isothermal and discharge is adiabatic. Considering the equations (1) and (2), $\Delta\mathbf{V}$ is between 50% and 70% of the nominal accumulator volume. The following applies as a guiding principle:
$\mathbf{V}_0 = 1.5 \ldots 3 \times \Delta\mathbf{V}$ (5)

Calculation diagram

For graphic determination, the formulas (4.1) and (4.2) are converted into diagrams on pages 8 and 9.
Depending on the task, the available oil volume, the accumulator size or the pressures can be determined.

Correction factor K_i and K_a

The equations (4.1) and (4.2) apply to ideal gases only. The behavior of real gases, however, will show considerable variation at operating pressures above 200 bar which will have to be accounted for by correction factors. These can be taken from the following diagrams. The correction factors the ideal sampling volume $\Delta\mathbf{V}$ is to be multiplied with lie within a range of 0.6 ... 1.

Application of calculation diagrams

(see page 8 ... 9)

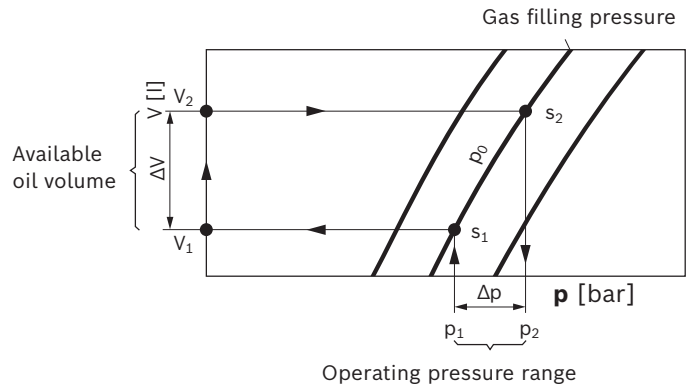

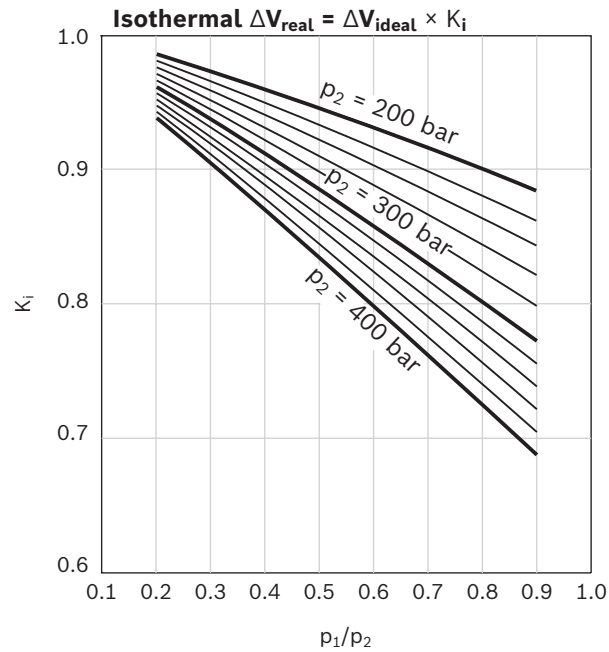

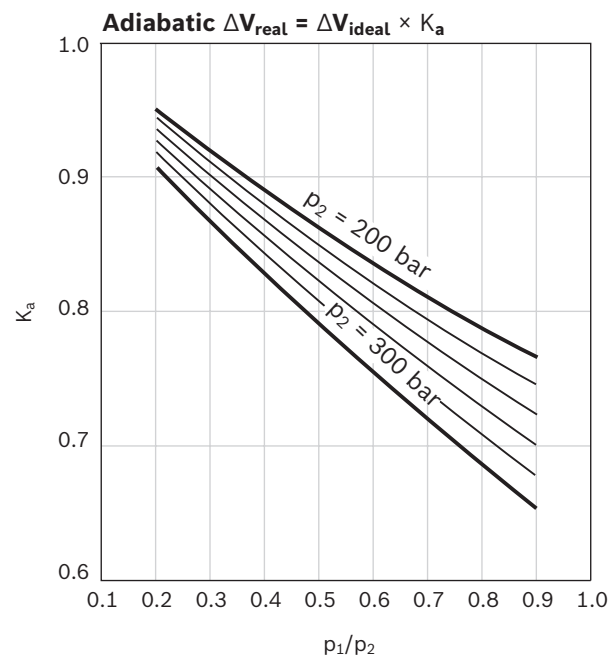

Characteristic curves

Isothermal state changes p_0 = 1 ... 90 bar

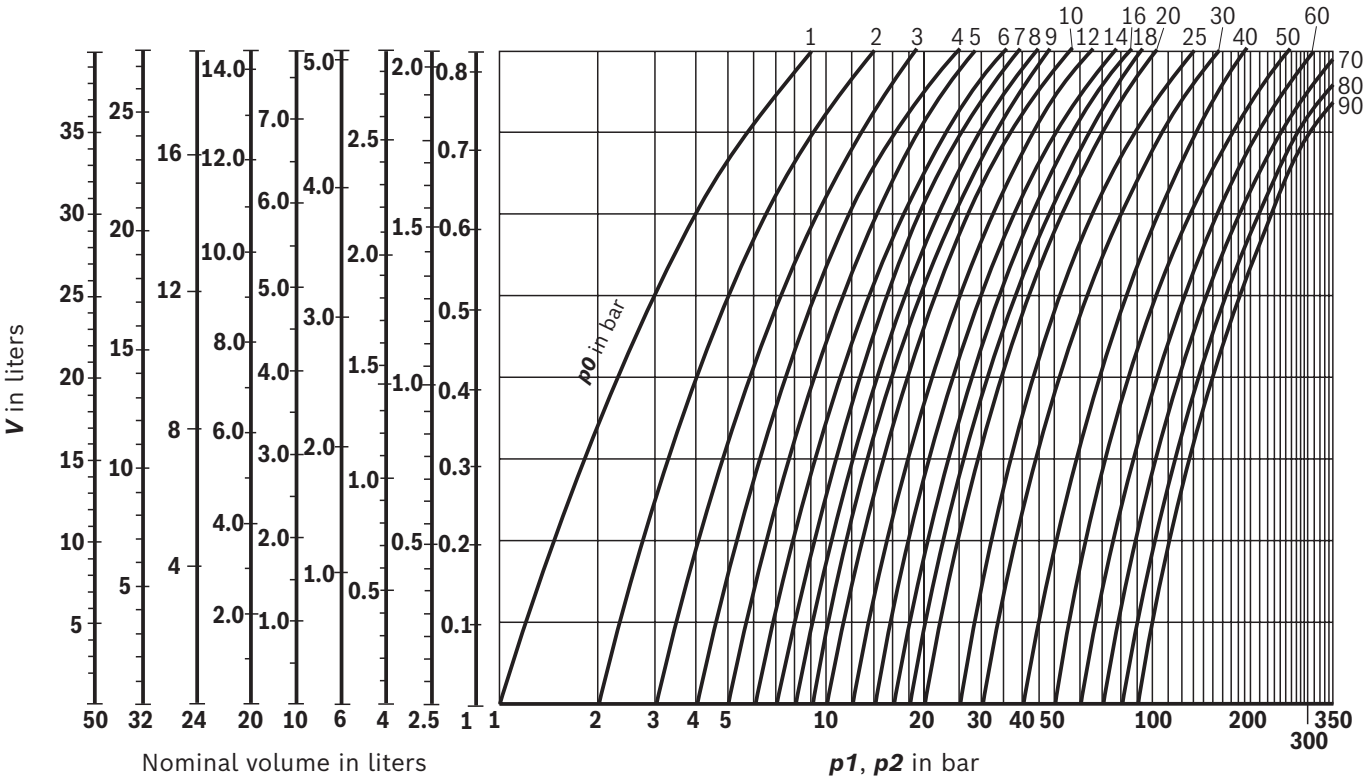

Isothermal state changes p_0 = 100 ... 280 bar

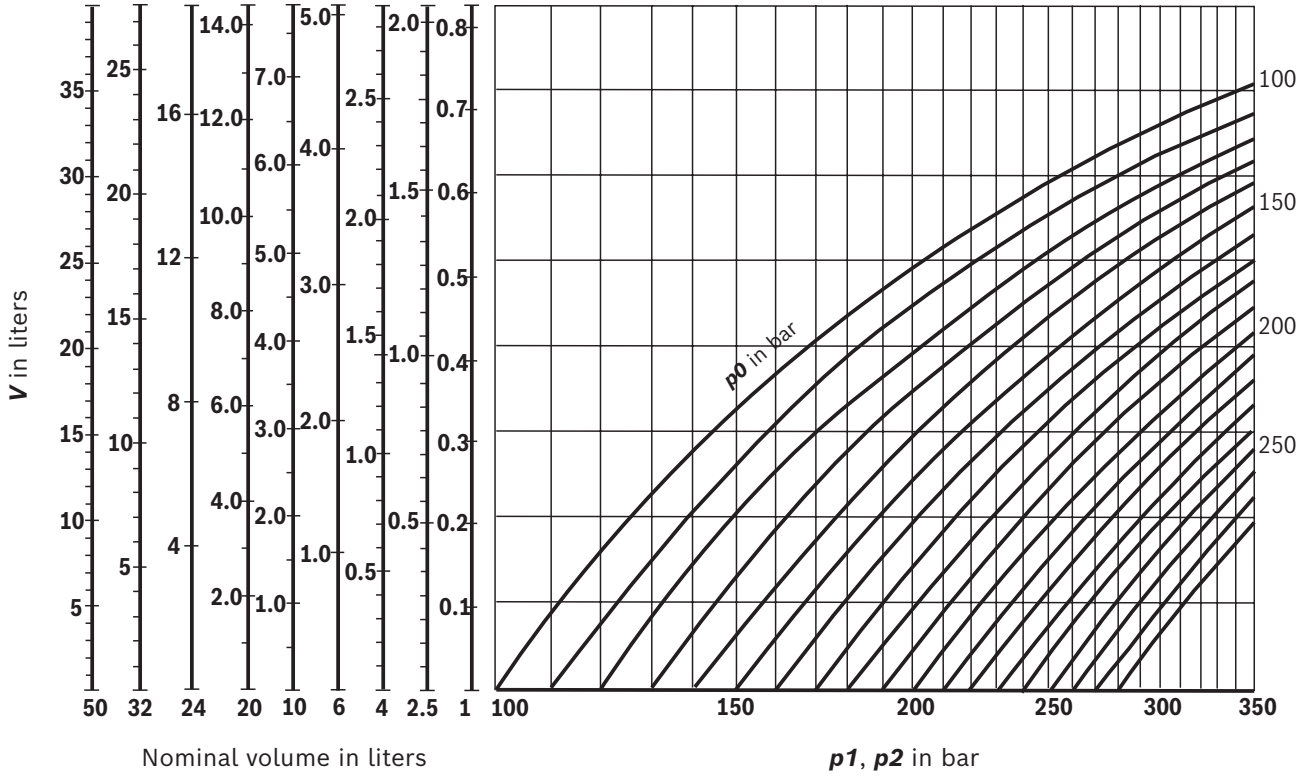

Characteristic curves

Adiabatic state changes p_0 = 1 ... 90 bar

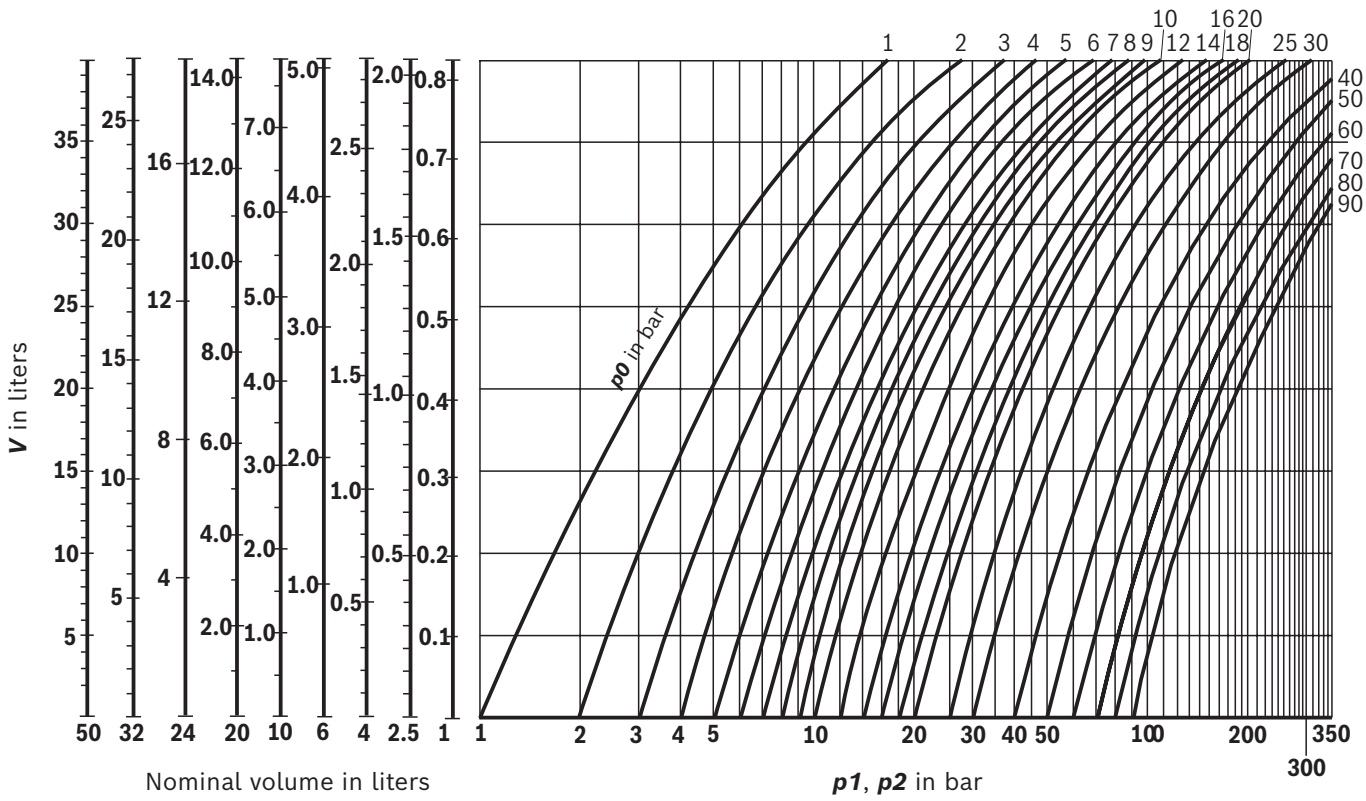

Adiabatic state changes p_0 = 100 ... 280 bar

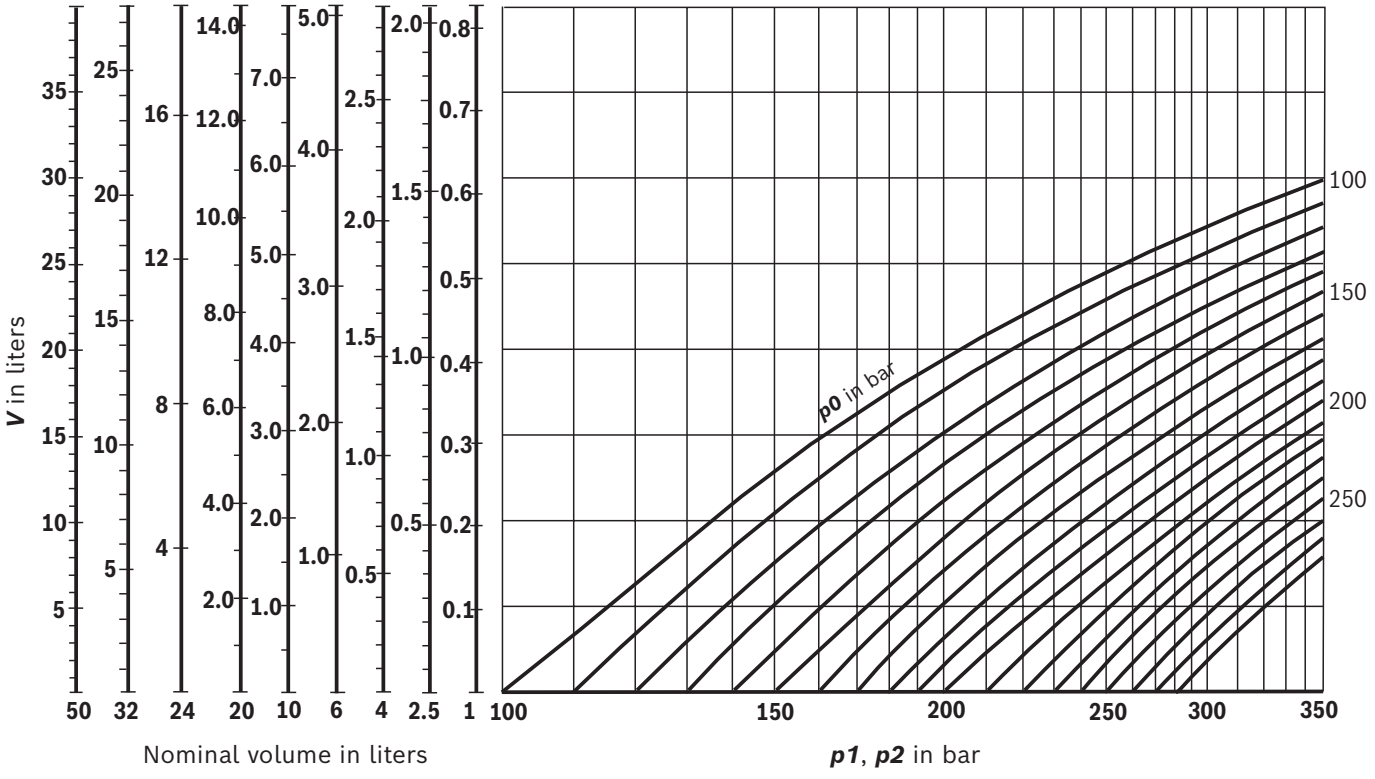

Dimensions
(dimensions in mm)

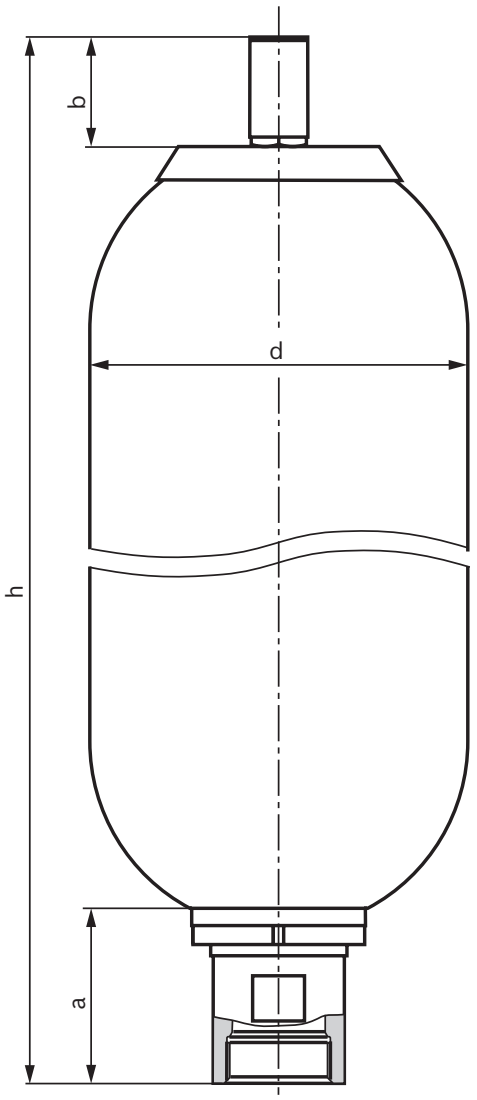

Gas port form "2"
Gas valve ISO 4570 8V1

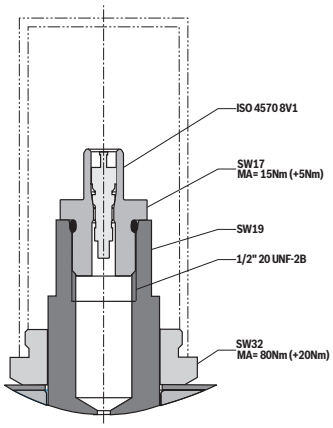

Gas port form "3"
Gas valve 5/8“-18 UNF

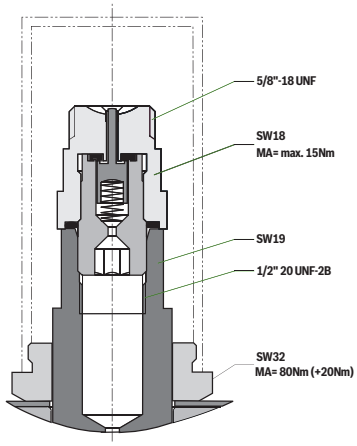

Type of mounting "G"
Pipe thread with radial sealing surface

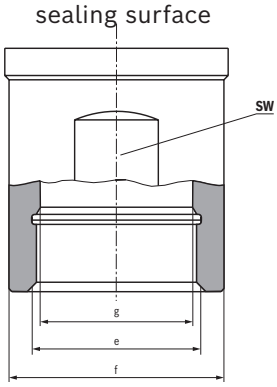

Type of mounting "F"
Flange mounting with axial sealing surface

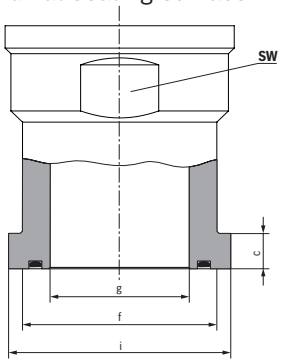

Type of mounting G											
Nominal volume [l]	**Port size**	**h**	**d**	**a**	**b**	**e**	**f**	**g**	**i**	**j**	**SW**
1	G05	337.5±17	Ø114±1.14	65±3	71.5±3	G3/4"	Ø52.4	Ø23H7	-	-	50
2.5	G07	541.5±21	Ø114±1.14	65±3	71.5±3	G1 1/4"	Ø52.4	Ø36H8	-	-	50
4	G07	421.5±21	Ø168±1.68	65±3	71.5±3	G1 1/4"	Ø52.4	Ø36H8	-	-	50
6	G07	552.5±17	Ø168±1.68	65±3	71.5±3	G1 1/4"	Ø52.4	Ø36H8	-	-	50
10	G09	575±16	Ø219±2.19	101.5±3	71.5±3	G2"	Ø76	Ø54H7	-	-	70
20	G09	885±16	Ø219±2.19	101.5±3	71.5±3	G2"	Ø76	Ø54H7	-	-	70
24	G09	1020±16	Ø219±2.19	101.5±3	71.5±3	G2"	Ø76	Ø54H7	-	-	70
32	G09	1405±16	Ø219±2.19	101.5±3	71.5±3	G2"	Ø76	Ø54H7	-	-	70
50	G09	1920±16	Ø219±2.19	101.5±3	71.5±3	G2"	Ø76	Ø54H7	-	-	70

Type of mounting F											
Nominal volume [l]	**Port size**	**h**	**d**	**a**	**b**	**e**	**f**	**g**	**i**	**j**	**SW**
10	S19	577±16	Ø219±2.19	103.5±3	71.5±3	-	Ø67	Ø48	Ø76.6	12.6	70
20	S19	887±16	Ø219±2.19	103.5±3	71.5±3	-	Ø67	Ø48	Ø76.6	12.6	70
24	S19	1022±16	Ø219±2.19	103.5±3	71.5±3	-	Ø67	Ø48	Ø76.6	12.6	70
32	S19	1407±16	Ø219±2.19	103.5±3	71.5±3	-	Ø67	Ø48	Ø76.6	12.6	70
50	S19	1922±16	Ø219±2.19	103.5±3	71.5±3	-	Ø67	Ø48	Ø76.6	12.6	70

Accessories
(dimensions in mm)

HAB mounting elements

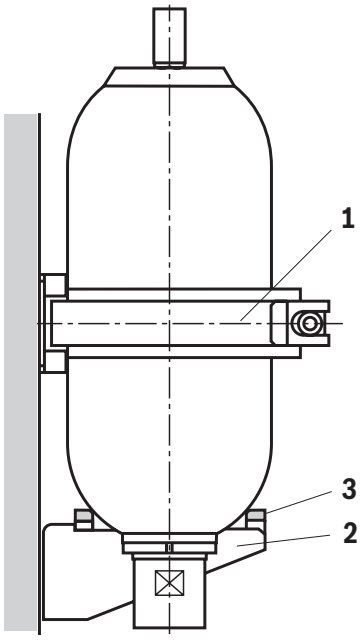

Description	Material number	Nominal volume in liters				
		1 ... 2.5	4 ... 6	10	20 ... 32	50
Mounting clamp 110-120 MM	1531316021	1				
Mounting clamp 160-170 MM	1531316022		2			
Mounting clamp 214-224 MM	1531316023			1	2	
Mounting clamp 216-222 MM	R901446479					2
Console	1531334008			1	1	1
Rubber support ring	1530221042			1	1	1

1 Clamp
2 Console
3 Rubber support ring

Console and rubber support ring

Console (material number: 1531334008)

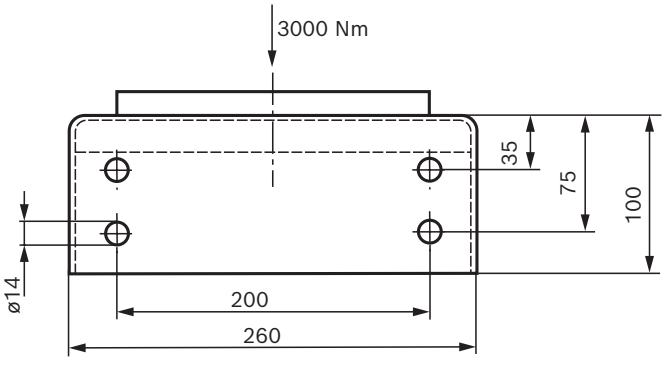

Rubber support ring (material number: 1530221042)

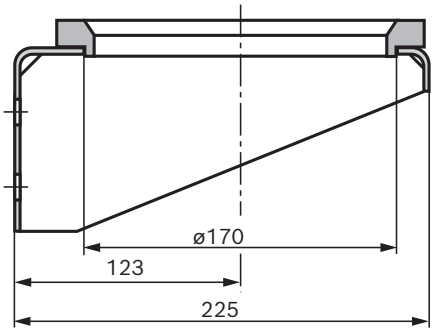

Accessories: Mounting clamps (dimensions in mm)

Type F1

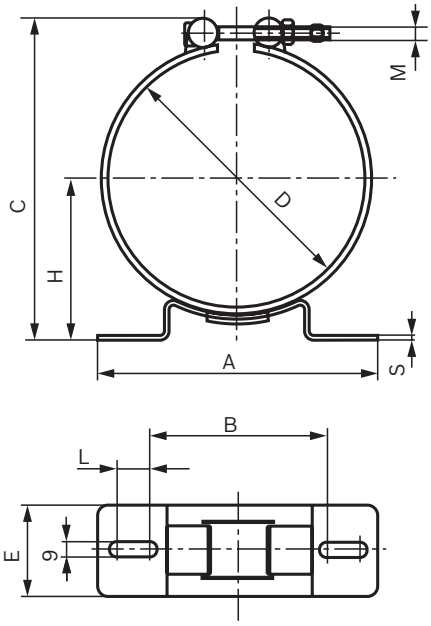

Type F2

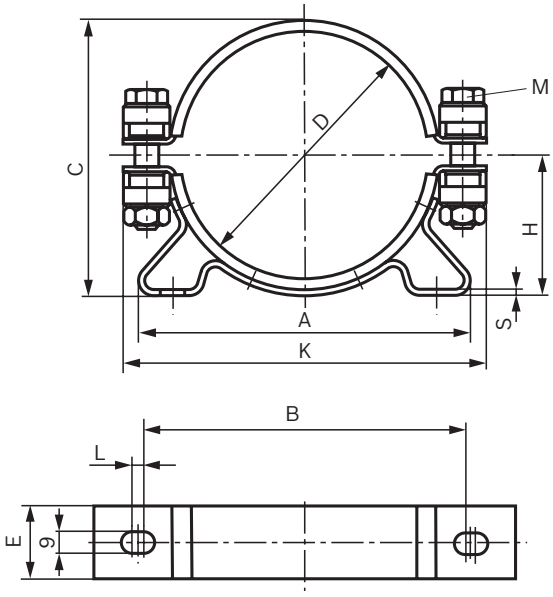

Denomination		Dimensions										Material number
		A	B	C	D	E	H	K	L	M	S	
Mounting clamp 110-120 MM	F1	135	96	150	110-120	50	64-69	–	6	M8	3	1531316021
Mounting clamp 160-170 MM	F1	237	147	200	160-170	50	90-95	–	35	M8	4	1531316022
Mounting clamp 214-224 MM	F1	237	147	254	214-224	50	120-125	–	35	M8	4	1531316023
Mounting clamp 216-222 MM	F2	254	212	233	216-222	30	121.5-124.5	278	4	M12	3	R901446479

Accessories: Charging and test device (dimensions in mm)

Measurement case

Measurement case	Material number
▶ **for bladder-type accumulators (HAB)**	**0538103011**
▶ **for bladder and diaphragm accumulator (HAB/HAD)**	**0538103014**
▶ **Spare parts:**	
– Case (without contents)	R901079781
– Charging and test valve HAB	0538103005
– Charging and test valve HAD	0538103006
– Pressure gauge 0 to 250 bar	1537231001
– Hose l = 2.5 m with transition socket (D)	1530712005

Supplemental parts (separate order)		**Material number**
Pressure gauge 0 ... 25 bar		R900033955
Pressure gauge 0 ... 60 bar		1537231002
Pressure gauge 0 ... 400 bar		1537231005
Transition socket	(F)	1533391010
	(GB)	1533391011
	(USA)	1533391012
	(KR)	1533391013
	(J)	R900216133
	(RUS)	1533391015
Hose l = 5 m with transition socket	(D)	1530712006

Charging and test valve

Valve body with check valve, drain valve, pressure gauge connection and gas hose connection

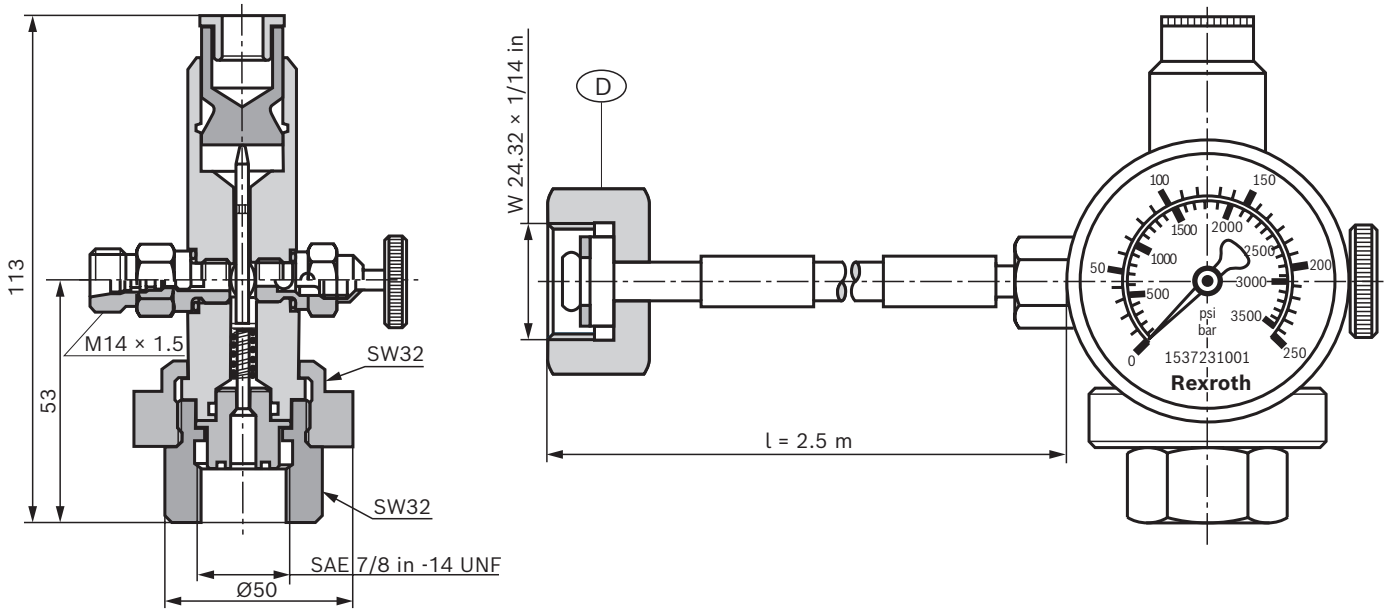

Notices:
Above the gas valve of the accumulator, an installation space of 200mm must be provided for use of the testing and charging device.
For respective adapters, see page 14 and 15

Accessories: Adapter for nitrogen bottle to cap nut
(dimensions in mm)

Material number: 1533391010

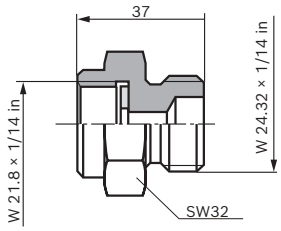

Material number: 1533391013

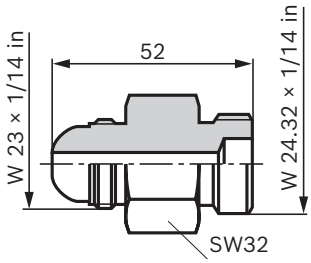

Material number: R900034782

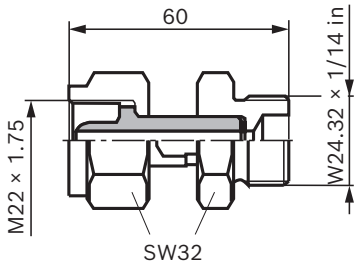

Material number: 1533391011

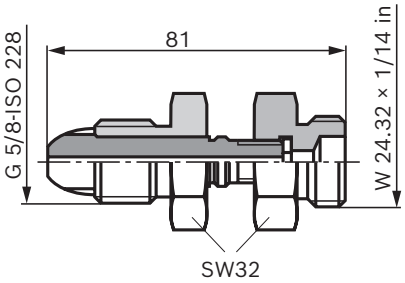

Material number: R900216133

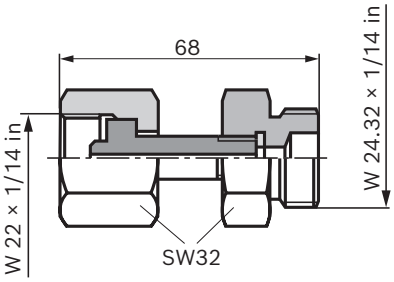

Material number: R900708208

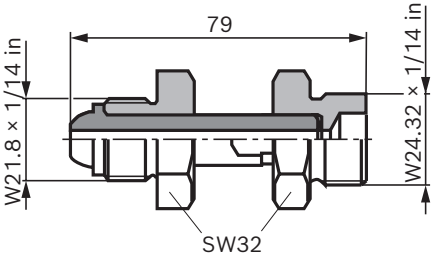

Material number: 1533391012

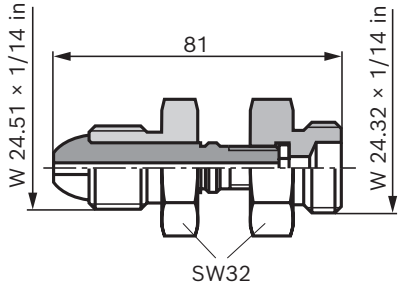

Material number: 1533391015

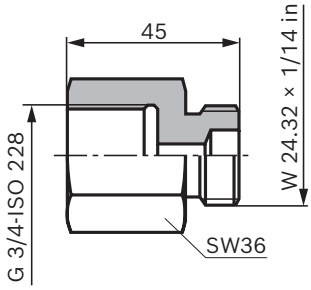

Material number: R901070776

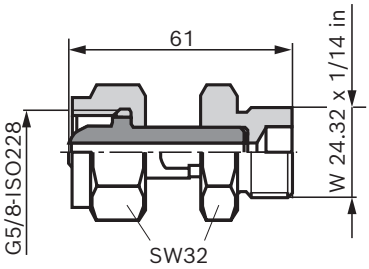

Accessories: Adapter for nitrogen bottle to cap nut (dimensions in mm)

Country [1]	Material number								
	1533391010	1533391011	1533391012	1533391013	R900216133	1533391015	R900034782	R900708208	R901070776
Brazil		x							
Bulgaria		x							
China									x
France	x								
Greece		x							
United Kingdom		x							
India		x							
Italy								x	
Japan					x				
Canada			x						
North Korea				x					
South Korea				x					
Malaysia		x							
Mexico	x								
Pakistan		x							
Romania	x								
Russia						x			
Spain		x							
Saudi Arabia	x								
Singapore		x							
Taiwan							x		
Turkey		x							
USA			x						

[1] Other countries upon request

Accessories: Warning sign [1]

Warning sign	Material number
▶ for bladder-type accumulators HAB1-HAB2.5 Size: 100 mm x 45 mm Color: yellow	R901476664
▶ for bladder-type accumulators HAB4-HAB50 Size: 200 mm x 90 mm Color: yellow	R901440344

[1] The warning sign is available for order as of a batch size of 100 units.

Accessories: Accumulator adapter (dimensions in mm)

Adapter on metric male thread

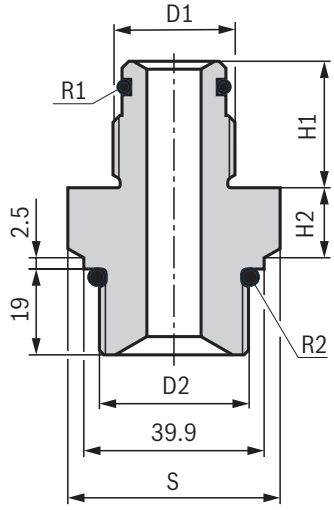

Nominal volume [l]	according to ISO 228		Dimensions [mm]			Order number complete with seal rings R1 and R2
	D1	D2	H1	H2	S	
1	G3/4	M33 × 2	28	15.5	SW41	R900862699
2.5 ... 6	G1 1/4	M33 × 2	37	16.5	SW46	R900862700
10 ... 50	G2	M33 × 2	43	20.5	SW65	R900862701

Adapter on flange connection

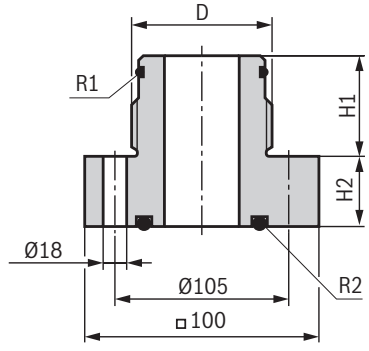

Nominal volume [l]	according to ISO 228	Dimensions [mm]		Order number complete with seal rings R1 and R2
	D	H1	H2	
10 ... 50	G2	44	29	R901518464

Accessories: Accumulator adapter (dimensions in mm)

Adapter on metric internal thread

(HAB..–1X auf HAB..–4X und –6X)

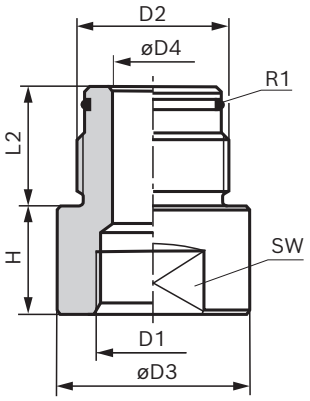

Nominal volume [l]	according to ISO 228		according to ISO 228		Dimensions [mm]					Material number complete with seal ring R1
	D2	M_A [Nm]	D1	M_A [Nm]	H	L2	ØD3	ØD4	SW	
1	G3/4	180^{+18}	M30 × 1.5	180^{+18}	32	28	46	12	41	R901252863
2.5 ... 6	G1 1/4	450^{+45}	M40 × 1.5	400^{+40}	43	37	60	20	55	R901252864
10 ... 50	G2	500^{+50}	M50 × 1.5	450^{+45}	41	44	78	32	70	R901252865

Adapter for reduction of pipe connection

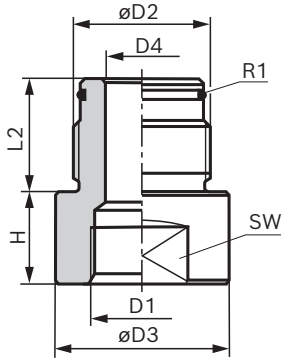

Nominal volume [l]	according to ISO 228		according to ISO 228		Dimensions [mm]					Material number complete with seal ring R1
	D2	M_A [Nm]	D1	M_A [Nm]	H	L2	ØD3	ØD4	SW	
1	G3/4	180^{+18}	G3/8	70^{+7}	8	28	38	12	32	R901252880
2.5 ... 6	G1 1/4	450^{+45}	G1/2	115^{+12}	8	37	60	24	55	R901252884
	G1 1/4	450^{+45}	G3/4	180^{+18}	8	37	60	24	55	R901252881
10 ... 50	G2	500^{+50}	G1/2	115^{+12}	20	44	75	30	65	R901252885
	G2	500^{+50}	G3/4	180^{+18}	20	44	75	30	65	R901252882
	G2	500^{+50}	G1	310^{+31}	20	44	75	30	65	1533C45045
	G2	500^{+50}	G1 1/2	450^{+45}	40	44	75	32	65	R901252883

Accessories: Pressure monitoring

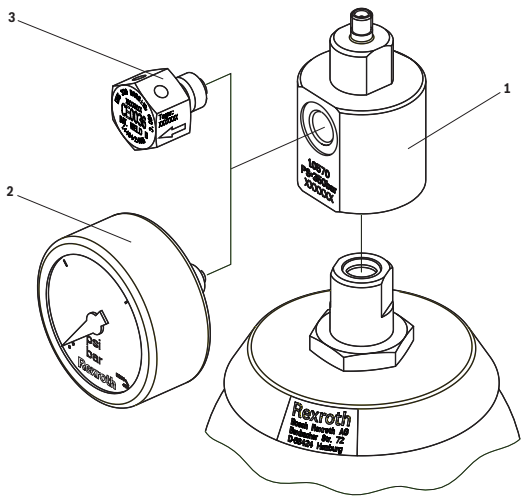

1 Adapter with G1/4 port

1535400171	Adapter HAB gas-side BG

2 Pressure gauge for G1/4 port

1537231002	Pressure gauge 0...60 bar
1537231001	Pressure gauge 0...250 bar
1537231005	Pressure gauge 0...400 bar

3 Bursting discs for G1/4 port

R901476100	Bursting disc G1/4; 300 bar
R901480366	Bursting disc G1/4; 330 bar
R901480367	Bursting disc G1/4; 350 bar
R901480368	Bursting disc G1/4; 410 bar

Spare parts

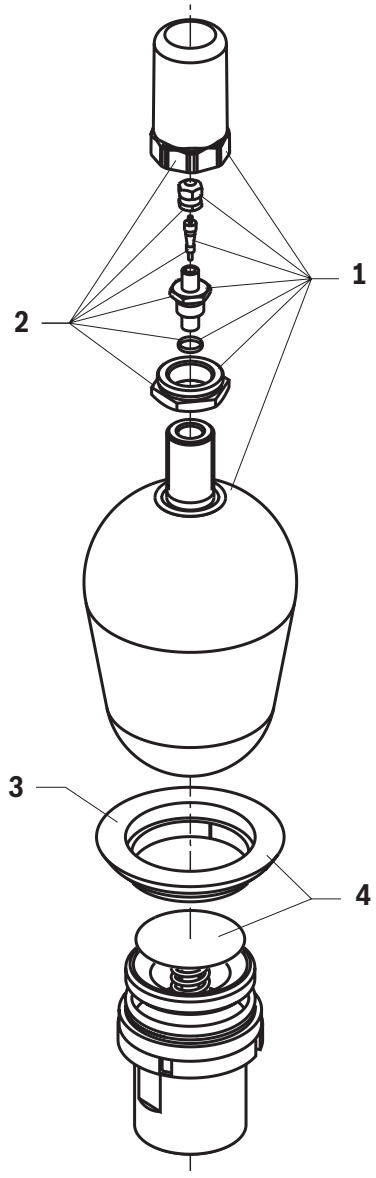

V_{nom} [l]	**Pos. 1** **Spare bladder with gas valve form "2" and seal kit**[1] Material number			
	NBR	**ECO**	**FKM**	**HNBR**
1	R901437540	–	–	R901438250
2.5	R901437541			R901438251
4	R901437542	R901438234		R901438252
6	R901437543	–		R901438253
10	R901437544	R901438235	R901438240	R901438254
20	R901437545	–	R901438241	R901438255
24	R901437546		–	R901438256
32	R901437547	R901438236	R901438242	R901438257
50	R901437548	–	R901438243	R901438258

V_{nom} [l]	**Pos. 2** **Gas valve** Material number		**Pos. 3** **Holding ring** Material number	
	Form "2" ISO 4570 8V1	**Form "3"** 5/8“-18 UNF	**NBR, HNBR, ECO**	**FKM**
1	R901438300	R901531340	R901438280	–
2.5				
4				
6				
10			R901438281	R901438291
20				
24				
32				
50				

V_{nom} [l]	**Pos. 4** **Oil valve kit consisting of holding ring and oil valve** Material number	
	NBR, HNBR, ECO	**FKM**
1	–	–
2.5		
4	R901438270	
6		
10	R901438271	R901449230
20		
24		
32		
50		

[1] Spare bladder with gas valve form "3" and seal kit on request.

Spare parts
(dimensions in mm)

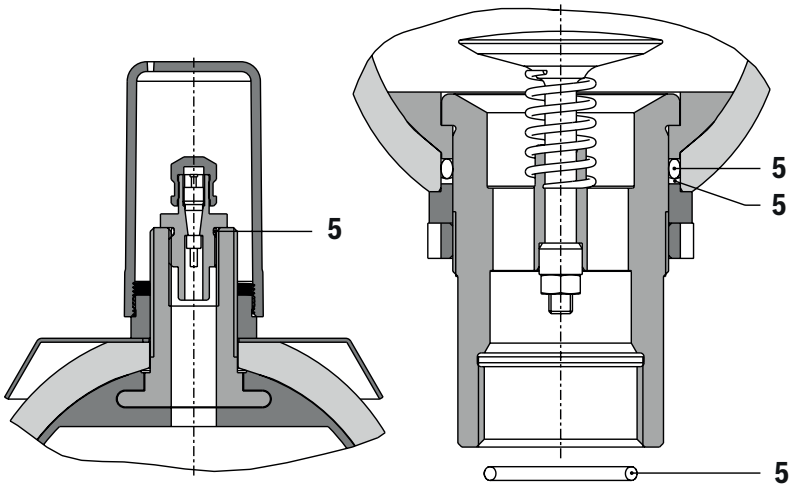

V_{nom} [l]	Pos. 5 Seal kit Material number	
	NBR, HNBR, ECO	**FKM**
1	R901441920	–
2.5	R901441921	
4		
6		
10	R901441922	R901441923
20		
24		
32		
50		

Important notes

Intended use
Rexroth bladder-type accumulators type HAB..-6X are intended for set-up of hydraulic drive systems in stationary mechanical engineering and plant construction.
In mobile applications or applications in which acceleration forces are applied to the bladder-type accumulator during intended use, its use is permitted only following release by the competent Rexroth product manager. Please contact technical sales for this.
Rexroth bladder-type accumulators type HAB..-6X are not intended for private use.

Project planning information
Bladder-type accumulators have to be safely and permanently fastened to the machine or system using mounting elements. The fastening is intended to keep the oil port tension-free. Particularly, no tension forces or static or dynamic inertia forces should be applied to the oil port. Thermal expansion of the supporting structure and vibrations originating from the environment should be considered in the selection of suitable mounting points.

Safety instructions for hydraulic accumulators
For bladder-type accumulators type HAB..-6X, operating instructions 50171-B must be observed. The machine end-user will have sole responsibility for complying. General information for hydro-pneumatic accumulators in hydraulic system can be found in ISO 4413.

Keep all documents included in the delivery in a safe place; they will be required by the expert in recurring tests.

Legal provisions
Hydro-pneumatic accumulators are pressure vessels and subject to the application of national provisions and/or regulations valid at the place of installation.
In Germany, the Ordinance on Industrial Safety and Health (BetrSichV) applies.
Special regulations are to be observed in shipbuilding, aircraft construction, mining, etc.

Authorized persons
According to Ordinance on Industrial Safety and Health (BetrSichV), only authorized persons may carry out tests. Authorized persons are such persons having obtained the required expert knowledge through professional training, experience and recent professional activity.

Safety equipment

☞ **Notice:**
Hydro-pneumatic accumulators have to be secured against operation outside of the admissible limits according to Pressure Equipment Directive 2014/68/EU.

In order not to exceed the maximum operating pressure, Bosch Rexroth recommends the use of an accumulator shut-off block type ABZSS according to data sheet 50131.

Further information

Operating instructions valid for HAB1 ... HAB50

Language	Operating instructions
German	RE 50171-B
English	RE 50171-B
French	RF 50171-B
Spanish	RS 50171-B
Italian	RI 50171-B
Chinese	RC 50171-B
Russian	R-RS 50171-B
Norwegian	R-NO 50171-B
Polish	R-PL 50171-B
Czech	R-CZ 50171-B
Romanian	R-RU 50171-B
Hungarian	RU 50171-B
Portuguese	RP 50171-B
Swedish	R-SK 50171-B
Finnish	R-SF 50171-B
Turkish	RT 50171-B

CE Declarations of Conformity

In German, English, French

Type	Document number
HAB1-...-60/...BA	–
HAB2.5-...-60/...CE	RA56313069
HAB4-...-60/...CE HAB6-...-60/...CE	RA56313070
HAB10-...-60/...CE HAB20-...-60/...CE HAB24-...-60/...CE HAB32-...-60/...CE HAB50-...-60/...CE	RA56313071

- Accumulator shut-off block: Data sheet 50131
- Selection of filters: www.boschrexroth.com/filter
- Information on available spare parts: www.boschrexroth.com/spc

Bosch Rexroth AG
Industrial Hydraulics
Zum Eisengießer 1
97816 Lohr am Main, Germany
Phone +49 (0) 93 52 / 40 30 20
my.support@boschrexroth.de
www.boschrexroth.de

Notes

Bosch Rexroth AG
Industrial Hydraulics
Zum Eisengießer 1
97816 Lohr am Main, Germany
Phone +49 (0) 93 52 / 40 30 20
my.support@boschrexroth.de
www.boschrexroth.de

Notes

Bosch Rexroth AG
Industrial Hydraulics
Zum Eisengießer 1
97816 Lohr am Main, Germany
Phone +49 (0) 93 52 / 40 30 20
my.support@boschrexroth.de
www.boschrexroth.de